A3.2.04

FLOOR	**2**
ROOMS	**1,5**
AREA WITHOUT PARTITIONS	**29,58 m²**
BALCONY	**4.31 m²**
KRYPTIS	**R**
PRICE	**149 560 €**

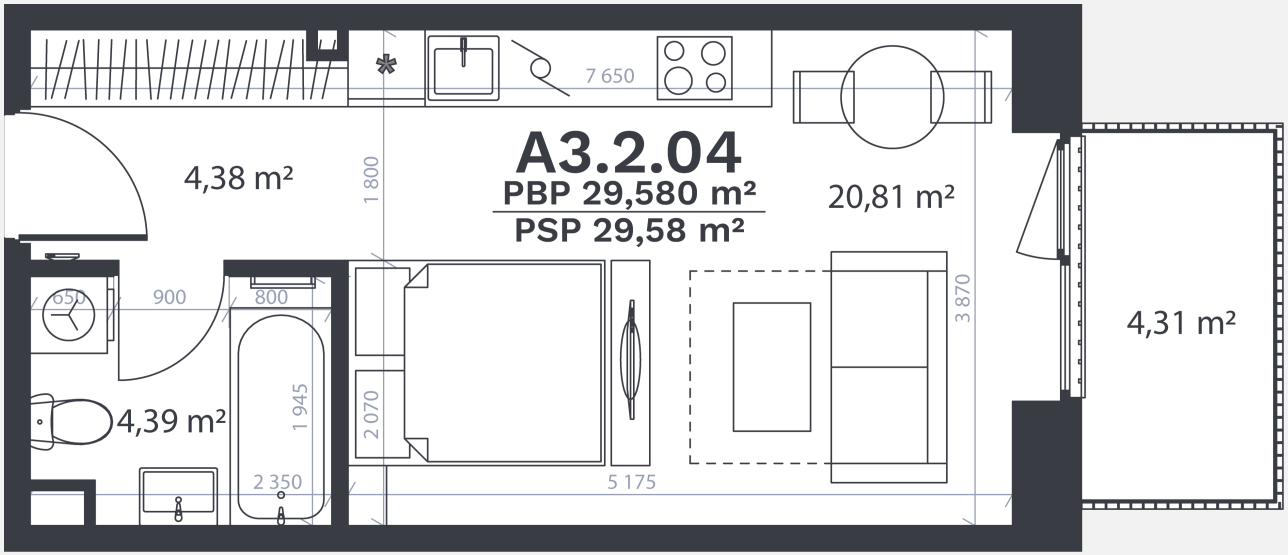

Visualizations are artistic interpretations intended to convey the concept and vision of the project. They are not an exact representation and are subject to change as the project develops.

CITUS Mūnai

+370 678 56 066 / info@munaibycitus.lt

Kareivių St. 2E, Vilnius

www.munaibycitus.lt

A3.2.04



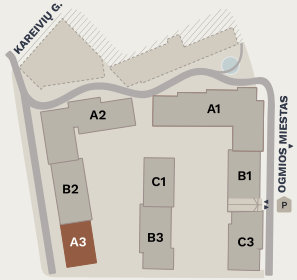

CITUS Mūnai

+370 678 56 066 / info@munaibycitus.lt

Kareivių St. 2E, Vilnius

www.munaibycitus.lt

Visualizations are artistic interpretations intended to convey the concept and vision of the project. They are not an exact representation and are subject to change as the project develops.